Main bearings:
T3 Segment - Spherical roller bearings

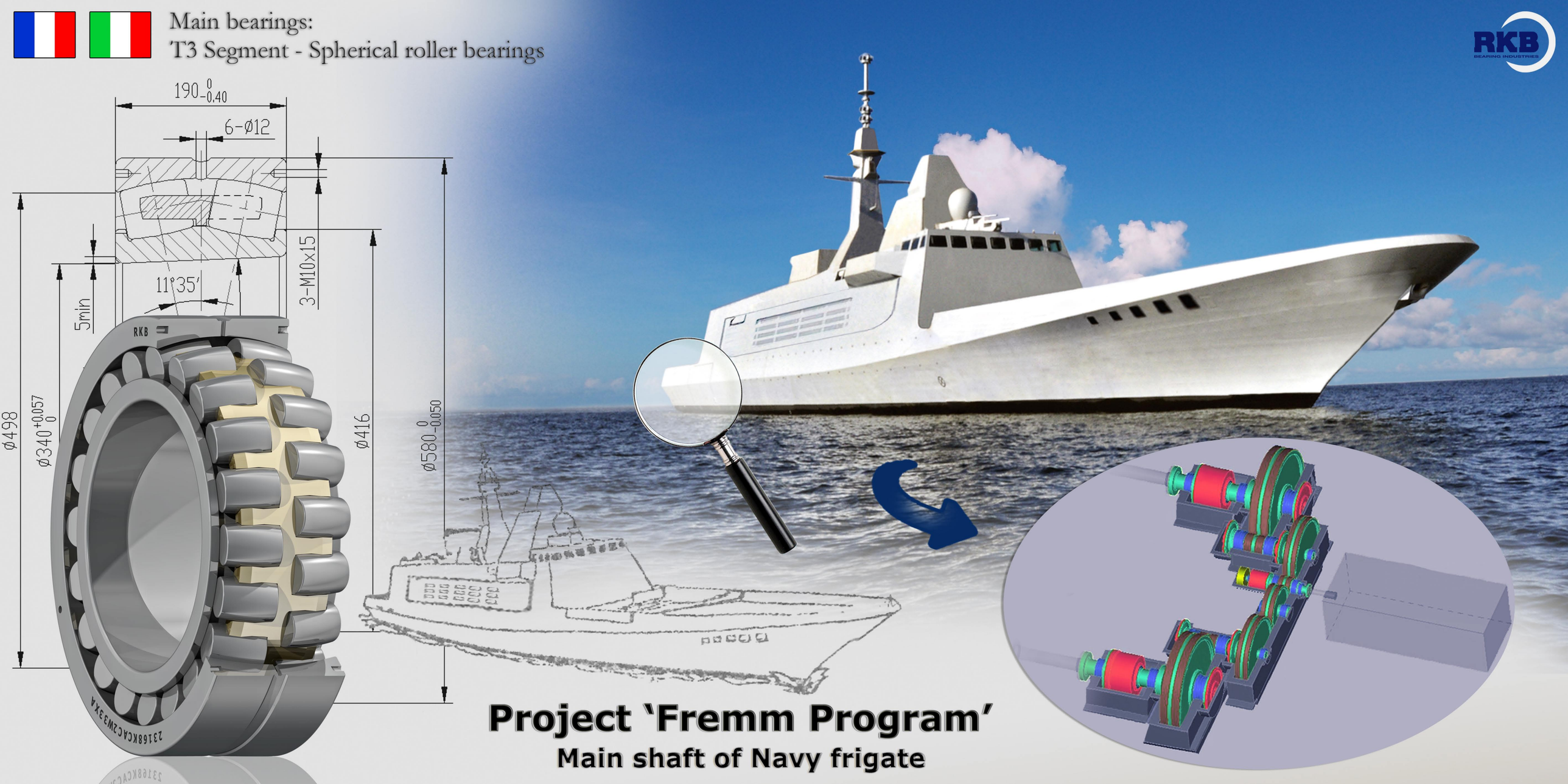

Project 'Fremm Program'

Main shaft of Navy frigate

Main bearings:
T3 Segment - Spherical roller bearings

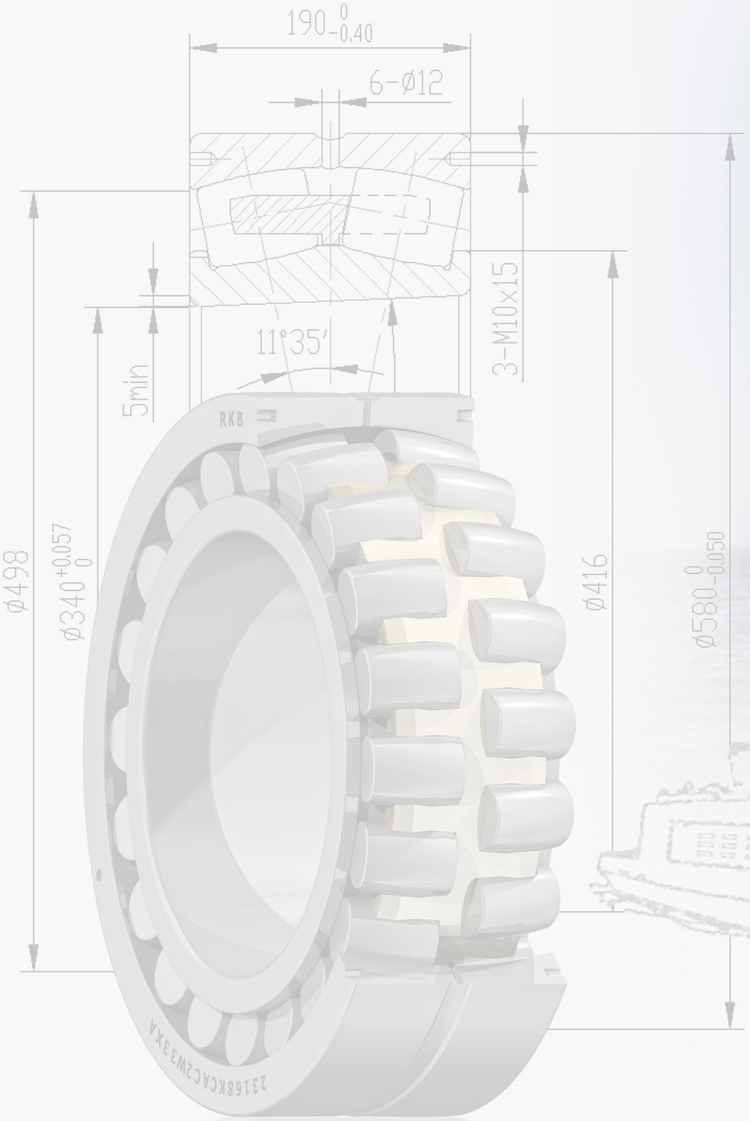

Big size application optimized spherical roller bearings

Up to 340 mm inner diameter

Safety factor (S_0) according to military offshore equipment guidelines

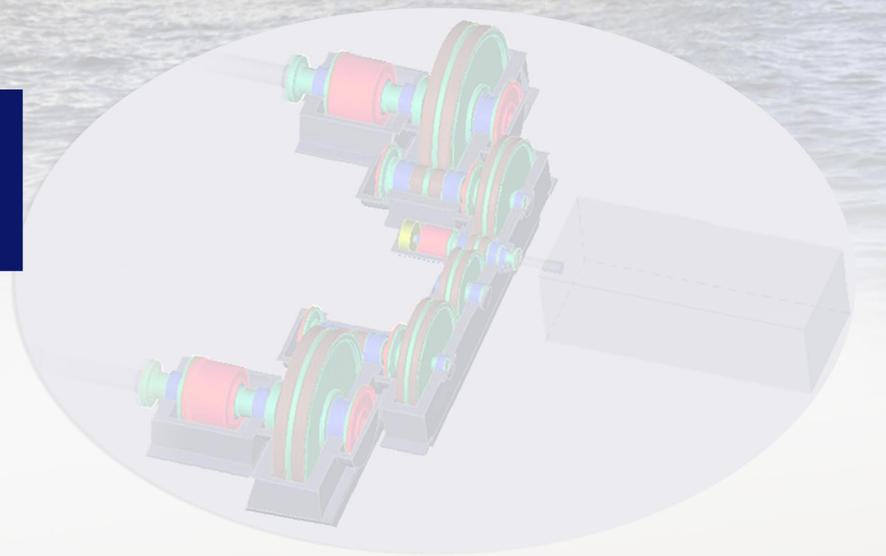

Project 'Fremm Program'

Main shaft of Navy frigate