Main bearings: T3 Segment - Four-row cylindrical roller bearings

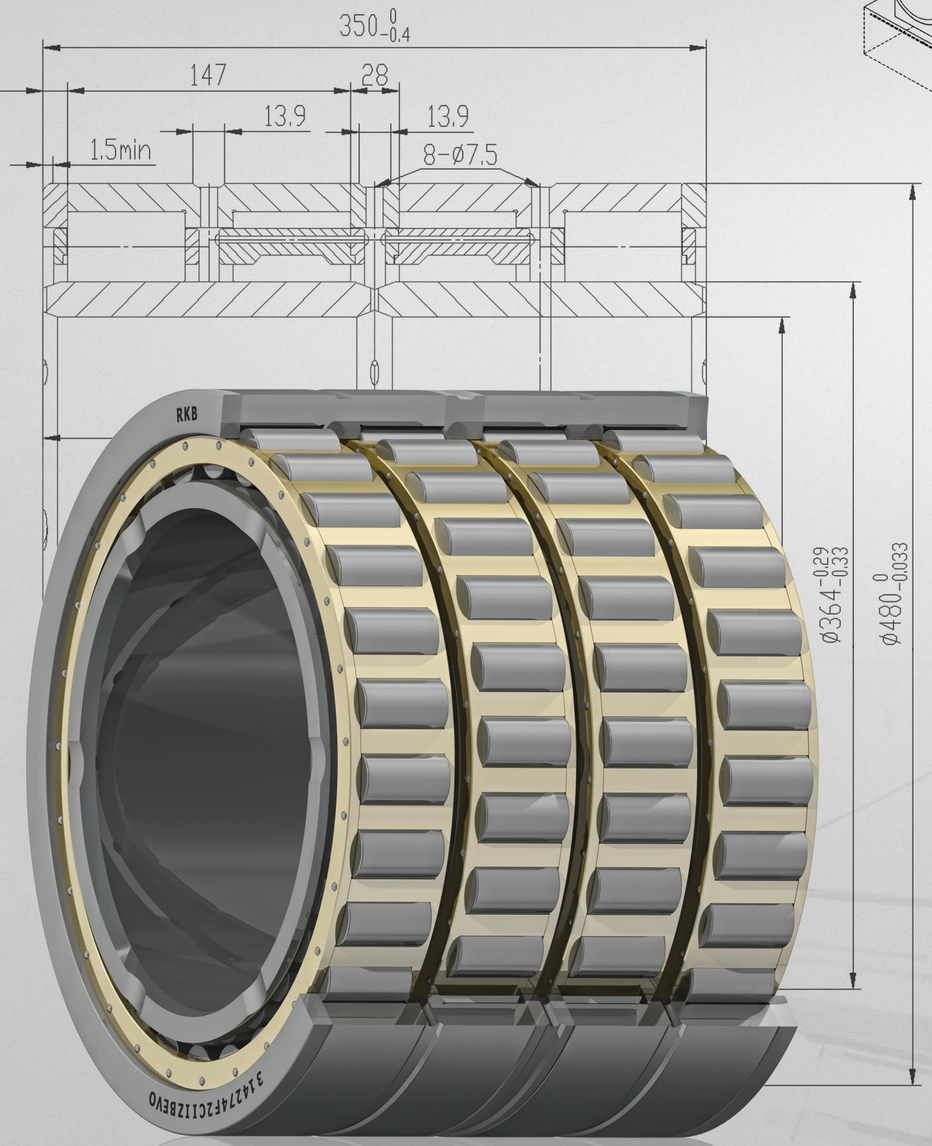

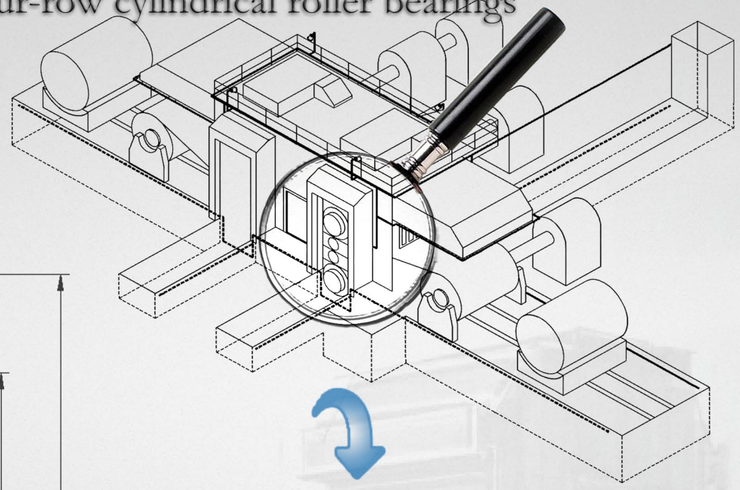

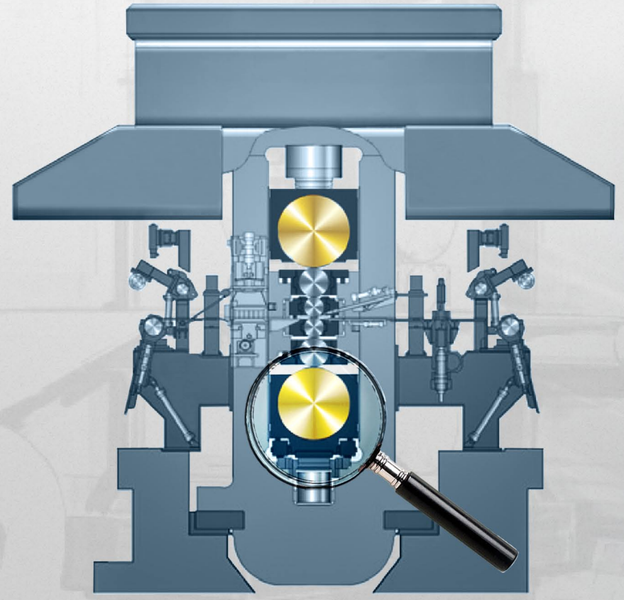

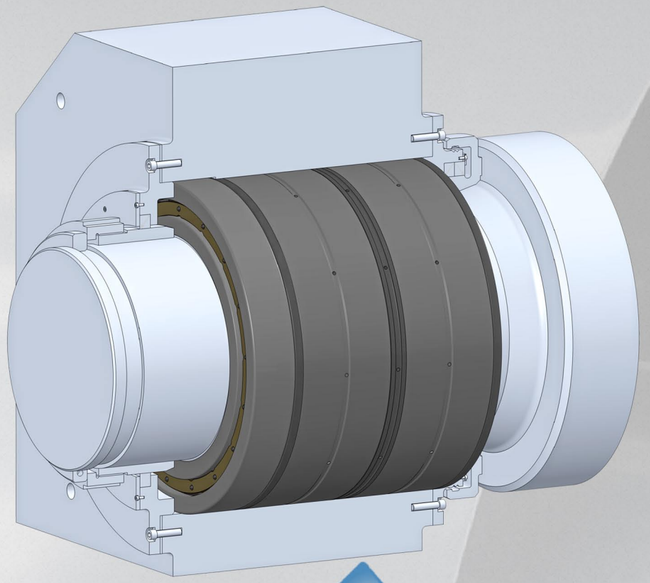

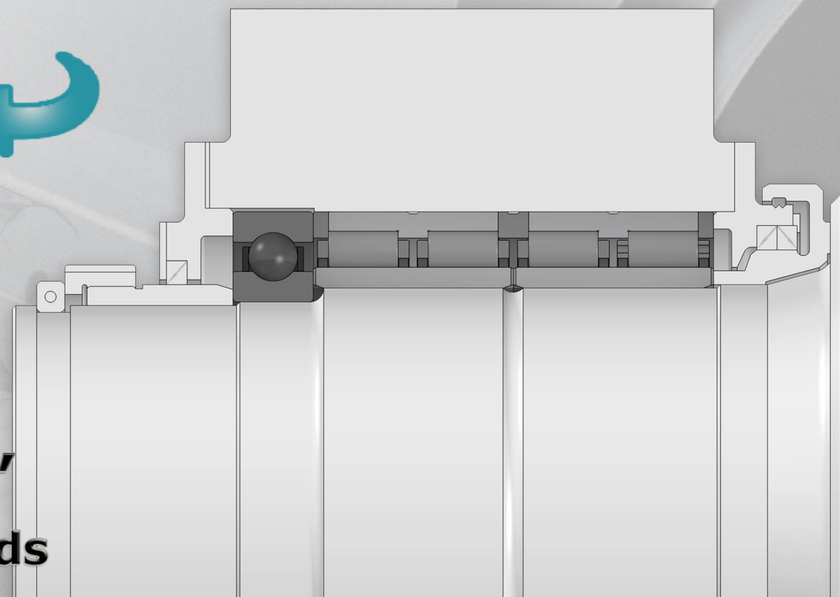

Project 'Multiroll EVO'

Backup rolls of rolling mill stands

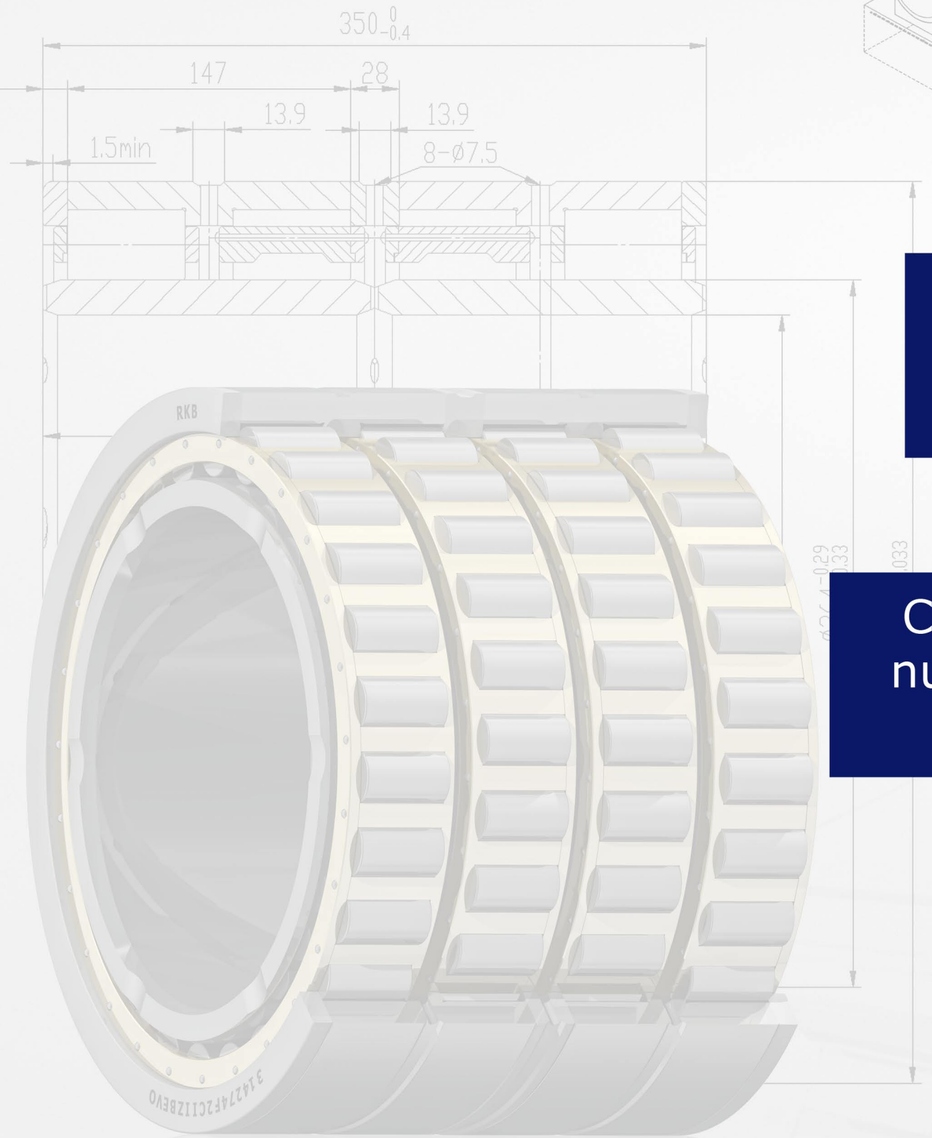

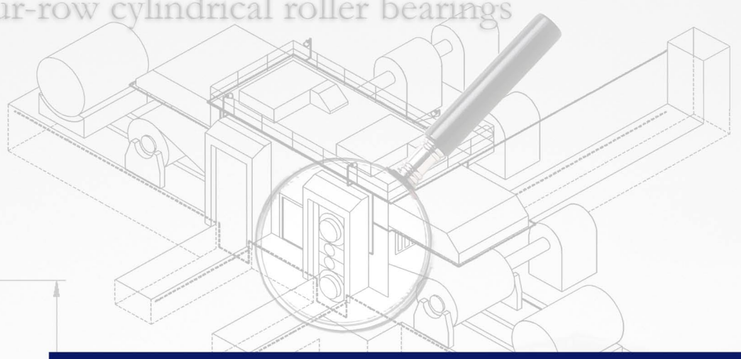

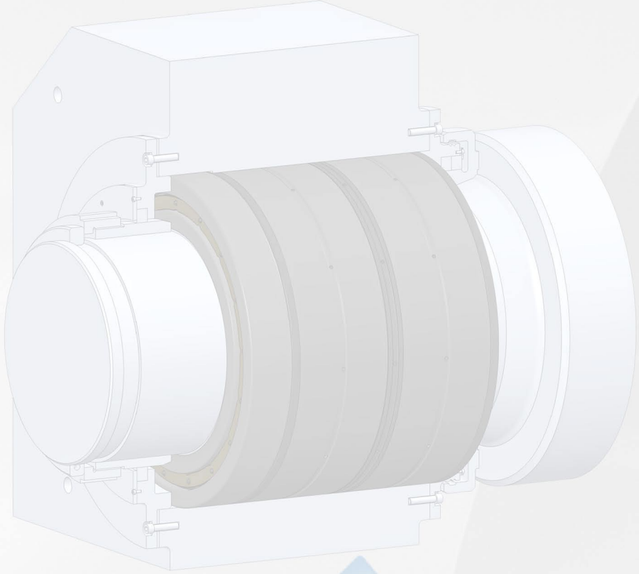

Internal design evolution for improved rolling accuracy at high speeds

Cage design incorporating a large number of rollers as an alternative to pierced roller version

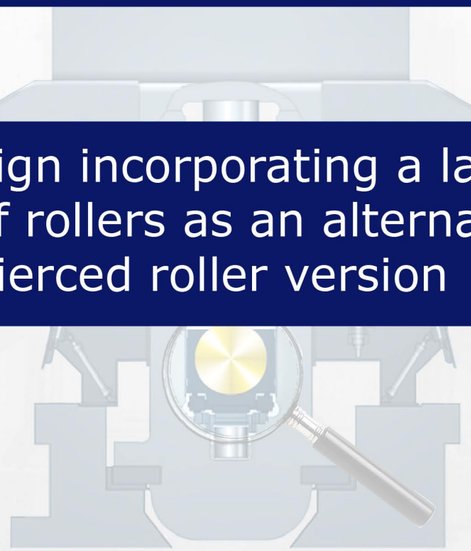

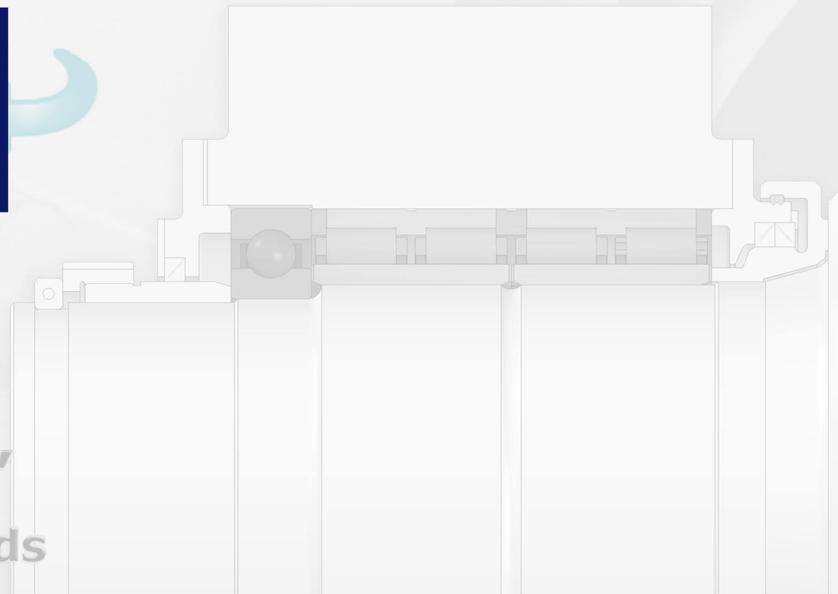

Project 'Multiroll EVO'

Backup rolls of rolling mill stands